Keor HPE

THREE-PHASE UPS

From 60 to 600 kW





GLOBAL SPECIALIST IN ELECTRICAL
AND DIGITAL BUILDING INFRASTRUCTURES

legrand®

Keor HPE

THREE-PHASE UPS

Keor HPE UPS are high efficiency Online Double Conversion UPSs with latest generation 3-level IGBT technology. They supply a rated power of 60-80-100-125-160-200-300-400-500-600 kVA and can be connected in parallel and have N + X redundancy up to a maximum of 6 units.

Keor HPE is the ideal solution for medium and large power critical applications (tertiary, hospital, industry, transport) where continuity of service, high quality power supply and reduced consumption are required.









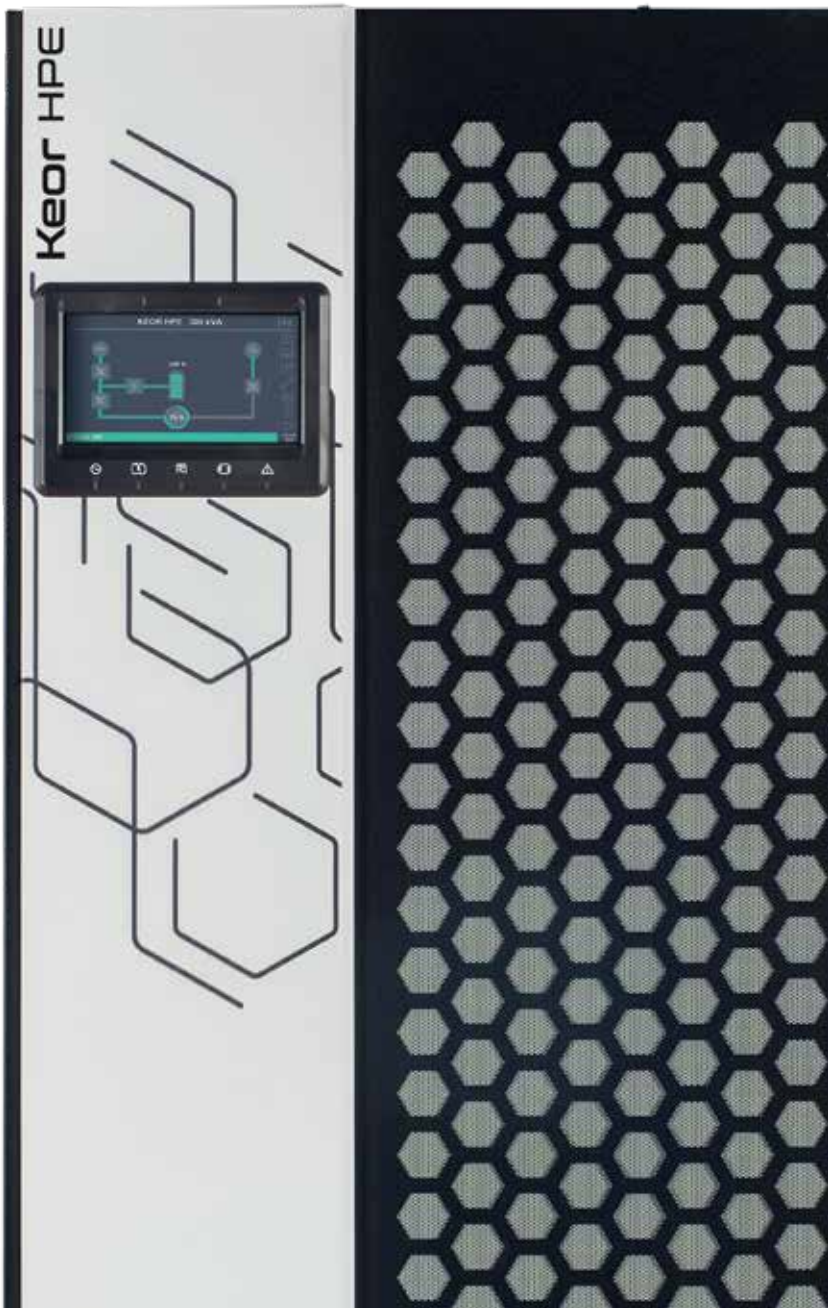

New aesthetics

The refinement of the design
and the careful choice
of materials reflect the performance
and reliability characteristics
of the **Keor HPE** family.
The new door with white panel,
the new touch screen displays
and the hexagonal motif,
also reflected in the ventilation
grids enrich the product,
combining technology and design.



Smart Display

The new **Keor HPE** are equipped
with smart, interactive, simple
and intuitive displays, thanks to which
it is possible to view the operating parameters
of the UPS, selecting the preferred language.
The displays are supplied in 2 different versions:
7 inch LCD for 60 –160 kW models
10 inch LED for 200 – 600 kW models.

Keor HPE

High efficiency and low TCO

Keor HPE is designed to reduce losses and lower management costs. The high yields (certified by external laboratories) guarantee low operating costs. Transformer-free technology and configurations with internal batteries facilitate installation and optimise space in technical rooms.

Greater power density

The 60 and 80 kW models have optimised dimensions in a volume of 0.78 m^3.

Power factor

The modern power circuit architecture allows for load supply with maximum active power.



Front internal access

The **Keor HPE** UPS was designed to be installed and maintained from the front. All the protection switches and communication ports are located on the front of the UPS.
A practical internal door also allows you to reach the parts installed on the bottom of the UPS, in order to have maximum access to all the components.
The simplicity of access to all parts subject to maintenance, significantly reduces **MTTR**, that is the **average machine repair time**.

Internal batteries

The 60 and 80 kW versions can contain up to 180 batteries, allowing standard levels of autonomy without relying on external batteries.

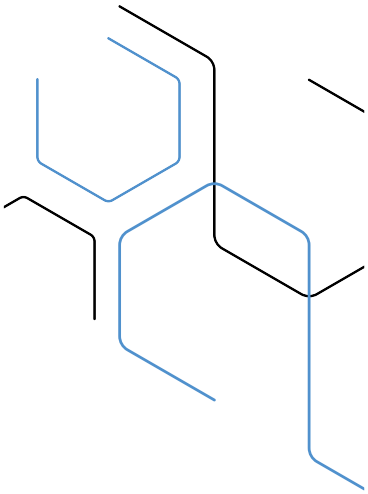



Keor HPE
400-600 kW

Keor HPE
60-80-100-125-160 kW

Keor HPE
200-250-300 kW

NOTE: front internal access is not possible in the 2 60 and 80 kW compact models.

Keor HPE

Parallel capacity

Up to 6 units can be connected in parallel, achieving maximum 3 MW power.

Stable and reliable parallel even at high power with many units (more than 3) thanks to dedicated power line balancing systems*.

Redundancy

The possibility of connecting up to 6 UPSs in parallel allows for maximum service continuity and system safety.

Back feed detection

All units have contacts to activate voltage back feed protection.

Insulation transformers

Available for the entire **Keor HPE** family, as optional external accessories.

OPTIMAL BATTERY MANAGEMENT

Keor HPE includes advanced battery charging and management functions, which guarantee the best performance and maximum operating life.

Intermittent charging

with adjustable cycle (27-3 standard), to extend the effective life and obtain maximum energy savings.

Automatic current charging

regulation with load power priority, to quickly charge batteries for long autonomies.

Voltage charge

compensation according to temperature, to avoid excessive charges and overheating. Temperature probe included in all units.



* For parallel configurations involving 4 or more units, please contact your Service representative for configuration guidance.

Keor HPE 60-80-100-125-160-200-250-300-400-500-600

Conventional UPS - Online three-phase double conversion VFI



3 110 87



9 535 01



9 535 03

Characteristics
- Power from 60 to 600 kVA
- Three-phase UPS
- IGBT rectifier
- High efficiency
- Digital signal processor (DSP)
- High input power factor (PFC) value
- Output power factor 1
- Battery charging, dynamic, intermittent, with temperature compensation
- Low input and output harmonic distortion values (THD)
- Compatibility with Genset
- Parallel capacity up to 6 units
- Communication ports
- Optimised cooling system

UPS

Model	Apparent power (kVA)	Active power (kW)	Autonomy (min.)	Dimensions H x W x D (mm)	Net weight (kg)
3 110 87	60	60	0	1500 x 560 x 940	225
3 110 88	60	60	5	1500 x 560 x 940	525
3 110 89	60	60	10	1500 x 560 x 940	675
3 110 90	80	80	0	1500 x 560 x 940	250
3 110 91	80	80	5	1500 x 560 x 940	700
3 111 27	100	100	-	1500 x 560 x 940	280
3 111 28	125	125	-	1500 x 560 x 940	290
3 111 29	160	160	-	1500 x 560 x 940	315
9 605 72	200	200	-	1978 x 880 x 970	530
9 535 00	250	250	-	1978 x 880 x 970	745
9 535 01	300	300	-	1978 x 880 x 970	675
9 535 02	400	400	-	1978 x 1430 x 970	1080
9 535 03	500	500	-	1978 x 1430 x 970	1250
3 111 30	600	600	-	1978 x 1630 x 970	1400

Accessories

	Description
9 535 16	HPE PARALLEL CARD*
9 535 17	HPE MODBUS RS485 CARD
-	Battery Cabinets **

On Demand

Synchronisation kit on two UPS ***
Synchronisation kit on two UPS units in parallel***
Insulation transformer
7" touch screen display (for Keor HPE 60-160)
IP 21 Kit
Common Battery Kit

* For parallel configurations involving 4 or more units, please contact your Service representative for configuration guidance.
** For battery cabinet solutions, please refer to the dedicated catalogue
*** to create two synchronous but independent power lines (typical in Tier III, IV systems)

NOTE: the stated back-up times in minutes are estimated and may vary according to the load characteristics, operating conditions and environment.

Keor HPE 60-80-100-125-160 kW

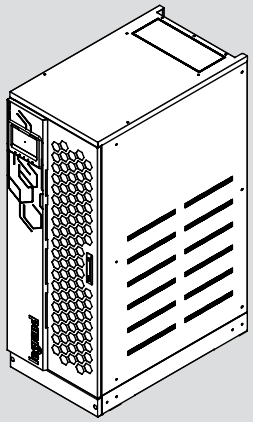

Keor HPE 200-250-300 kW

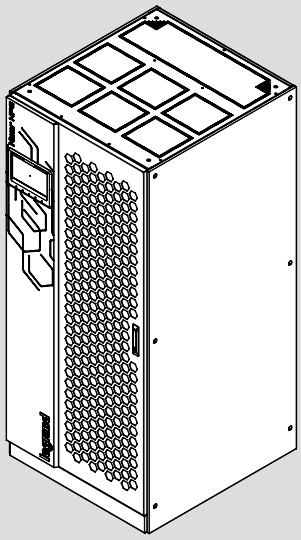

Keor HPE 400-500-600 kW

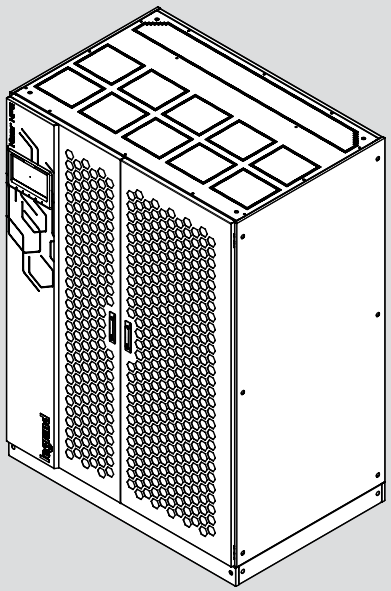

Keor HPE 60-80-100-125-160-200-250-300-400-500-600

Conventional UPS - Online three-phase double conversion VFI

Characteristics

General specifications	60	80	100	125	160	200	250	300	400	500	600
Apparent power (kVA)	60	80	100	125	160	200	250	300	400	500	600
Active power (kW)	60	80	100	125	160	200	250	300	400	500	600
Technology	On-Line Double Conversion VFI-SS-111										
Waveform	Sinusoidal										
UPS architecture	Conventional UPS with parallel capacity up to 6 units										
Input											
Input voltage	380-400-415 V 3Ph+N										
Input frequency	50-60 Hz (45-65Hz)										
Input voltage range	400 V -20% / + 15%										
THD Input Current	< 3%										
Compatibility with power supply units	Configurable to achieve synchronism between the input and output frequencies also for larger frequency ranges										
Input power factor	> 0.99										
Output											
Output voltage	380, 400, 415 V 3Ph+N										
Efficiency	Up to 95%		Up to 96%				Up to 96.4%				
Output frequency (apparent)	50 /60 Hz										
Crest factor	3:1										
THD Output Voltage	<1% (with linear load), <5% (with non-linear load)										
Output voltage tolerance	± 1% (with balanced load)										
Overload capacity	10 minutes at 110%, 5 minutes at 125%, 30 seconds at 150%, 0.1seconds >150%										
Efficiency in Eco Mode	> 98%										
Bypass	Automatic and maintenance bypass										
Batteries											
Internal battery	yes	yes	-	-	-	-	-	-	-	-	-
Autonomy expansion	Yes with additional battery cabinets										
Battery series type	VRLA - AGM Lead-acid, sealed, maintenance-free										
Battery test	Automatic or manual										
Battery charger	IU (DIN41773)										
Communication and management											
LCD display	LCD and LED display for real-time monitoring of the UPS status 4 buttons for menu navigation (7" touch display optional)					10" touch-screen display to monitor UPS status in real-time					
Communication ports	relay contact board, RS232, USB, Net Interface Slot (Optional: Mod-Bus RS485, SNMP-Ethernet)										
Alarms and signals	Configurable acoustic alarms and signals										
Emergency Power Off (EPO)	yes										
Remote management	available										
Battery temperature probe	yes										
Mechanical Features											
Dimensions (H x L x D) (mm)	1500 x 560 x 940					1978 x 880 x 970			1978 x 1430 x 970		1978 x 1630 x 970
Net weight (kg)	225	250	280	290	315	530	745	675	1080	1250	1400
Ambient Conditions											
Operating temperature (°C)	0 - 40										
Relative humidity (%)	< 95% non condensing										
Protection rating	IP20										
Noise at 1 mt from the unit (dBA)	< 60					< 65			< 72dB		< 80
Estimated content of circular economy derived materials%)	**33%**										
Recyclability rate calculated using the method described in technical report IEC/TR 62635 (%)*	**90,1%**										
Conformity											
Certifications	EN 62040-1, EN 62040-2, EN 62040-3, EN 62040-4										

*** This value is based on data collected from a technological channel operating on an industrial basis. It does not pre-validate the effective use of this channel for end-of-life of this product.**

CUSTOMER SERVICES



Reliable

Directly present in more than 70 countries and servicing its products in more than 150 countries worldwide, a team of qualified engineers is available to support your UPS system to ensure power quality and availability to the most critical loads.

Excellent

Legrand's competitive edge lies in its ability to provide high value-added UPS systems and services for both end users and business partners.
For Legrand, creating value means coming up with solutions for lower energy consumption, but also integrating product design into the overall development process. With around 200 000 catalogue items, the Group also provides all products required for electrical and digital building installations, particularly as integrated systems, finding solutions to fit everyone's needs.

Tailor-made

Legrand offers a complete range of specific solutions and services to meet customer requirements:
- Technical pre-sales support at the project design stage
- Factory acceptance test
- Supervision of installation, testing and commissioning, site acceptance test
- Operator training
- Site audit
- Warranty extension
- Annual maintenance contract
- Fast intervention on emergency call

CUSTOMER SERVICES

SUPPORT



SITE INSPECTION, INSTALLATION SUPERVISION.
We perform a comprehensive check of the UPS environment to ensure safety and fault-free operation.
Our technical experts give manufacturer's recommendations to the site engineer or electrical contractors, and supervise the UPS installation before load power-up.

SITE TEST, COMMISSIONING.
Our Service Engineers conduct rigorous site tests and full setting-up of the UPS system before going live. They also perform site acceptance tests according to your requirements.
Commissioning operations for all UPS are carried out by qualified engineers to guarantee seamless start-up.
After the final handing over of the UPS system, a Test and Commissioning report is delivered to you.

TRAINING



We offer on-site training to ensure your equipment's safe and efficient operation.
Troubleshooting courses are also available in our plants for intensive hands-on practice on UPS training equipment.

MAINTENANCE



PREVENTIVE MAINTENANCE
Electronic equipment and power systems, such as UPS, contain life-limited components and parts that must be replaced according to the manufacturer's specifications.
To ensure optimal performance and to protect your critical application from potential downtime, it is crucial to perform preventive maintenance operations on a regular basis and replace parts when needed. Our Service Contracts include cleaning, IR thermography, measurements, functional tests, event log and power quality analysis, battery health check, hardware and software upgrades, and technical reports.
A Preventive Maintenance Plan is one of the most cost-effective actions that can preserve your initial investment and ensure your business continuity.

CORRECTIVE MAINTENANCE, EMERGENCY CALL
In the event of an Emergency Call, our worldwide service network, with engineers and spare-parts stocks strategically located as close as possible to your site, guarantees a fast intervention time with 24/7/365 assistance.
After connecting his laptop to your UPS, very powerful diagnostic software helps our engineer to identify the fault, thus ensuring short MTTR (Mean Time To Repair).
Corrective actions are performed such as part replacement, adjustments and upgrades to return the UPS system back to normal operation.



FOLLOW US
ALSO ON

@ www.ups.legrand.com

World Headquarters and
International Department
87045 Limoges Cedex - France
☎ : + 33 (0) 5 55 06 87 87
Fax : + 33 (0) 5 55 06 74 55

AD-EXLGUPS-KE26B/GB - 07/2026